DUAL CONVERTER

INTRODUCTION OF DUAL CONVERTER

- **Dual Converter** is an Electronic Device or Circuit made by the combination of two bridges. One of them works as Rectifier(Converts A.C. to D.C.) and other bridge works as Inverter(converts D.C. into A.C.). Thus an electronic circuit or device in which two processes take place at same time, is known as Dual Converter.

PRINCIPLE OF DUAL CONVERTER

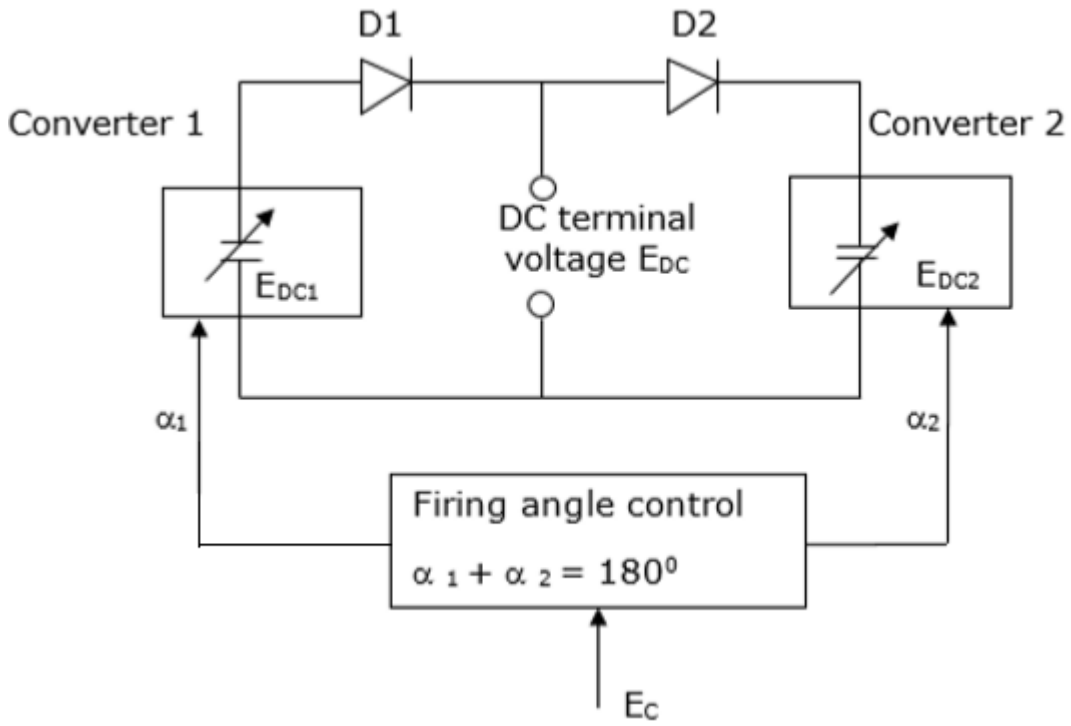

- In this simplified representation, assumption is made that the dual converters are ideal and they produce pure DC output terminals. As shown in fig.1, each two-quadrant converter is assumed to be a controllable direct voltage source, connected in series with a diode. **Diode D1 and D2 represent the unidirectional current flow characteristics of the converters. The current in load circuit can, however, flow in either direction.**

SINGLE PHASE DUAL CONVERTER

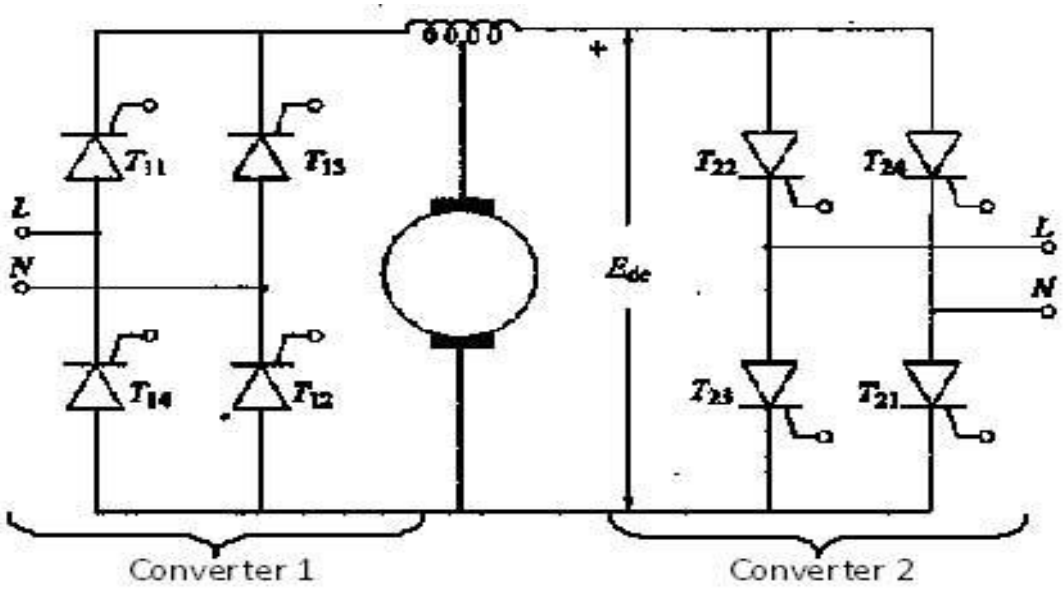

Fig. (2) Single phase Dual converter

- A dual converter may be single phase or 3 phase device. The simple diagram given above is of single phase dual converter.

- The difference between single phase and three phase dual converter is just that in Three phase we uses three phase rectifier at first stage, while in single phase dual converter we make use of single phase rectifier circuit at first bridge.
- As explained above that in single phase dual converter we uses single phase rectifier circuit for converting single phase A.C. into steady D.C. Bridge No. 1 consists of Rectifier. then the rectified D.C. fed to a filter which removes pulses from rectified D.C. and converts it to a pure D.C. by filtering. After that, this pure D.C. is fed to load and from load it is given to inverter circuit which converts this D.C. to A.C. and finally this A.C. of inverter taken as output.

THREE PHASE DUAL CONVERTER

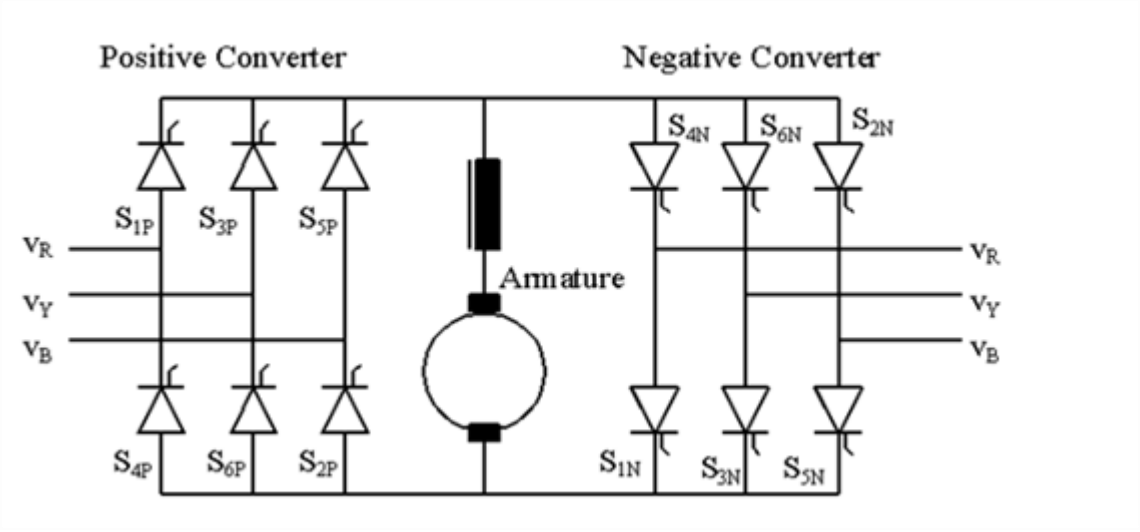

Fig. (3) Three Phase Dual Converter

- In three phase dual converter, we make use of three phase rectifier which converts 3 phase A.C. supply to D.C. The rest of the process is same and same elements are used. The output of three phase rectifier is fed to filter and after filtering the pure D.C. is fed to load. At last the supply from load is given to last bridge that is inverter. It do the Invert process of rectifier and converts D.C. into 3 phase A.C. which appears at output.

PRACTICAL DUAL CONVERTERS

- If the firing angles of the two full converter are adjusted such that $\alpha_1 + \alpha_2 = 180°$, and both the converters operate simultaneously, then they will produce the same average terminal voltages, which will be equal to the average dc load terminal voltage.
- Due to this values of firing angles, one converter will be in the rectification mode and the other in the inversion mode.
- However in the "Non Ideal Dual Converter,"(Practical) each converter produce a ripple voltages at the outputs of the two converters are mostly out of phase. In the way even though the average output voltages of the two converters are equal, their instantaneous values are nod equal.
- Due to this fact when the outputs of the two converters are connected together the instantaneous voltage difference at the terminals of the two converters will produce a large circulating current between the two converters.
- This current will not flow through the load. It is necessary to control this circulating current by some means to protect the SCRs connected in the converter circuits.

- Two methods that are commonly used to control the circulating current are as follows:

  1. Operation without circulating current.

  2. Operation with circulating current.

1. Operation without circulating current(Non circulating current mode)

In this mode of operation the flow of circulating current is not allowed at all by operating only one converter at a time. In this mode the converter which is operating will carry the entire load current. The other converter is temporarily kept in its OFF state.(firing pulse are not applied to it).

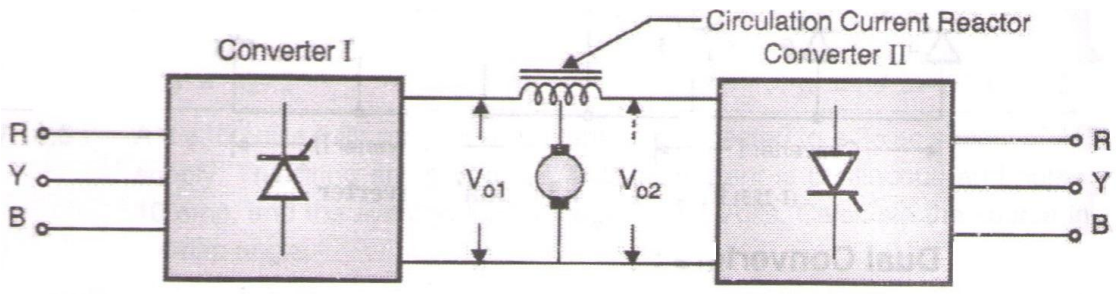

Fig:4 Dual Converter in Circulating Current Mode

2. Operation with circulating current(Circulating current mode):

In this mode of operation, the magnitude of circulating current is controlled below a safe value. This is achieved by connecting a circulating current reactor between the output terminals of the two converters as shown in figure.

DUAL CONVERTER WITH CIRCULATING CURRENT

- In this mode of operation, both the converters are turned on simultaneously, the firing angles are adjusted by the control voltage V_c in such a way that $(\alpha_1 + \alpha_2) = 180°$
- The average voltage produced by both the converters will be same, but their instantaneous values will be different. The circulating current will flow due to this potential difference.
- The circulating current is limited by a circulating current reactor.

Advantages

- Both the converters remain in conduction continually, irrespective of whether the load current is continuous or not..
- The dual converter responds fast if the converters are in continuous conduction.

Disadvantage

- The disadvantage is that reactor has to be used. The reactors are costly and bulky at high power levels.

Single phase dual converter

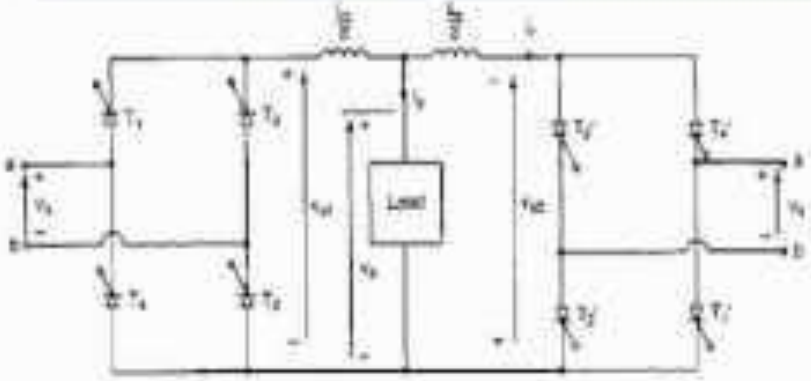

$$V_{dc1} = \frac{2V_m}{\pi}\cos\alpha_1 \qquad V_{dc2} = \frac{2V_m}{\pi}\cos\alpha_2$$

One converter is rectifying, the other is inverting

$$V_{dc1} = -V_{dc2}$$

therefore

$$\cos\alpha_2 = -\cos\alpha_1 = \cos(\pi - \alpha_1)$$

$$\alpha_2 = \pi - \alpha_1$$

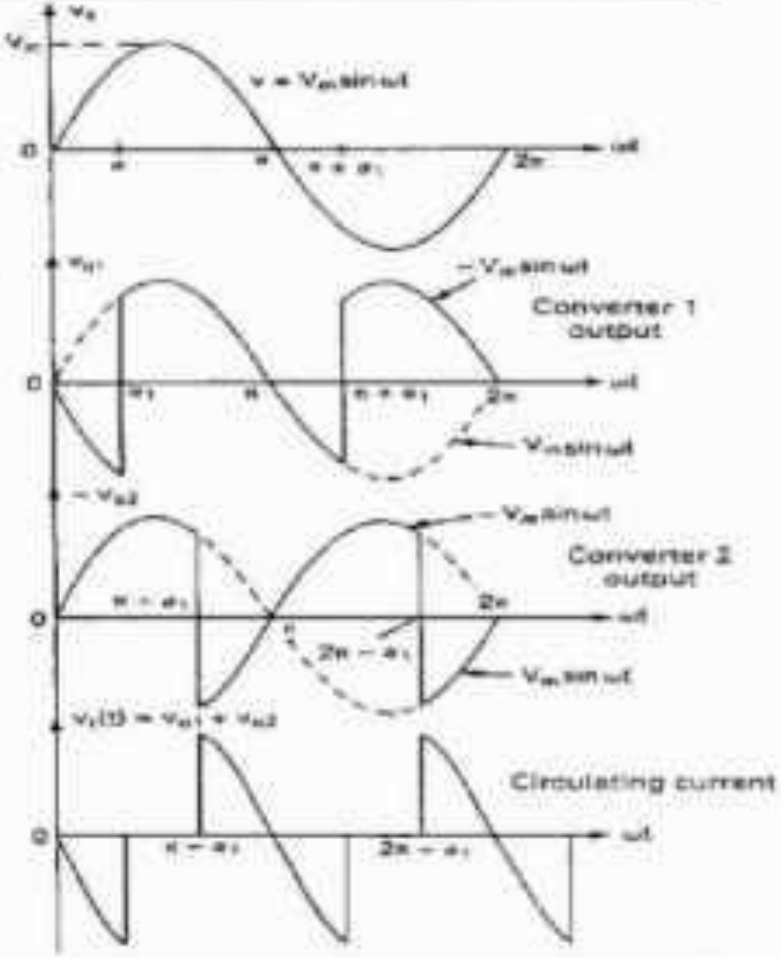

Waveforms for circulating current mode

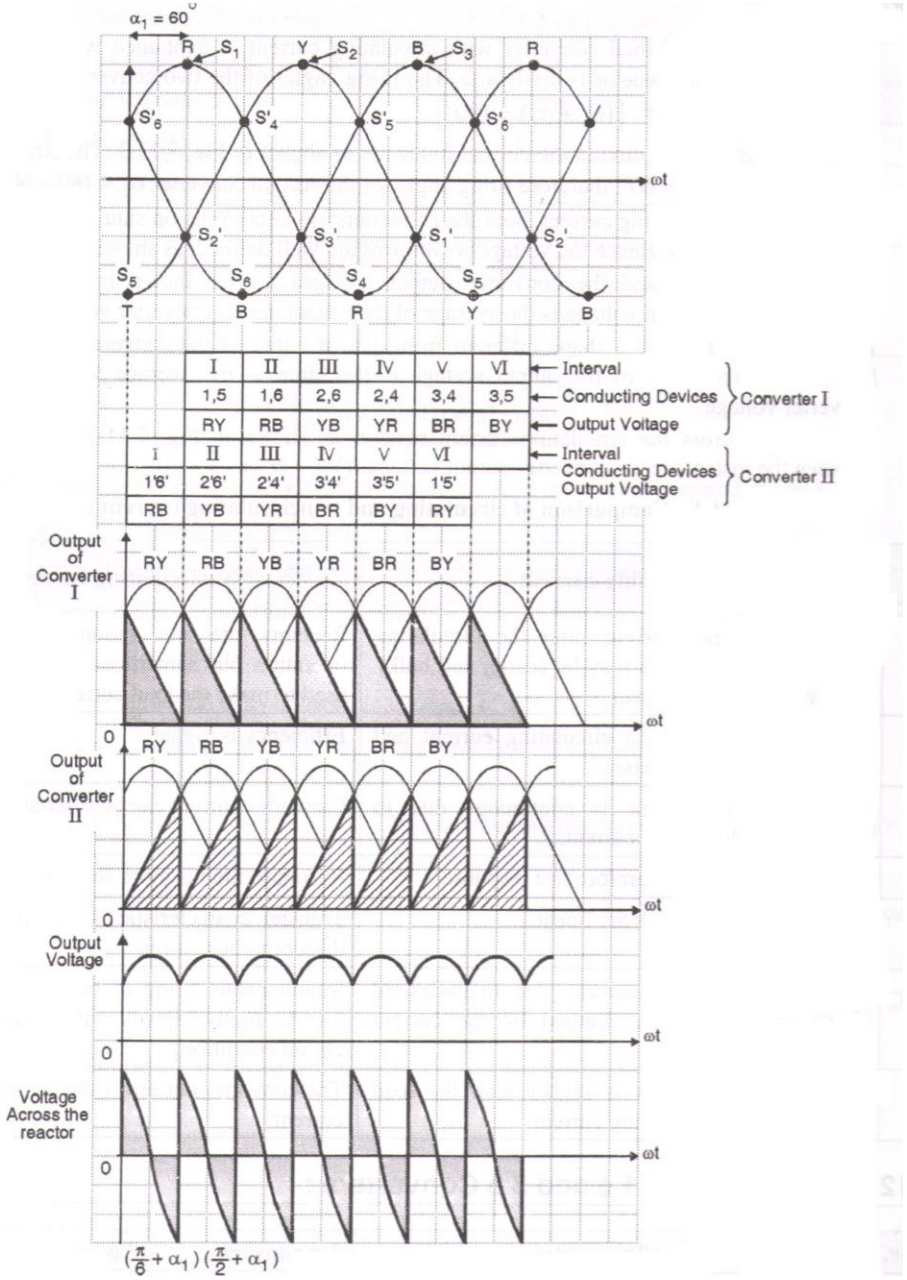

Fig:5 Waveforms for circulating current mode

OPERATION

- The operation of the dual converter with circulating current is explained with the following assumptions : 1. The rector is lossless. 2. The firing angles of the two converters are controlled so that their sum is 180°. [$(\alpha 1 + \alpha 2) = 180°$].
- The waveforms for the circulating current mode are as shown in fig.(5) The firing angle for the converter I is $\alpha 1 = 60°$, therefore firing angle for the second converter $\alpha 2 = 180 - 60 = 120°$.
- Because of the circulating current, both the converters are kept in the on state, at the no load and with load conditions. Hence the voltage waveforms are well defined, as shown in fig.(5)
- The supply voltage and the converter output voltages are as shown in fig.(5) The instantaneous dc output voltage is the average of the instantaneous converter voltages.
- This output voltage has a shape different from that of the converter output voltages. But the average value of the output voltage is the same as the average value of individual converter voltage.
- The voltage across the circulating current reactor, as shown in fig.(5) is the different between the instantaneous converter output voltages(V_{01}-V_{02}).

DUAL CONVERTER WITHOUT CIRCULATING CURRENT MODE

- In a dual converter without circulating current operating mode, the flow of circulating current is completely inhibited through automatic control of the firing pulses, so that only that converter which carries the load current is in conduction and the other converter is temporarily blocked. Since only one converter operates at a time and the other is in blocking state, no reactor is required between the converters.
- At a particular instant, suppose converter 1 is operating as a rectifier and is supplying the load current while pulses to second converter are blocked. For the inversion operation, converter 1 is first blocked by removing its firing pulses and load current is reduced to zero. Converter 2 is made to conduct by applying the firing pulses to it. The current in converter 2 would now build up through the load in the reverse direction. So long as converter 2 is in operation, converter 1 is in the blocking state since the firing pulses are withdrawn from it.

- The pulses to converter 2 are applied after a delay time (current-free safety interval) of 10 to 20ms. This delay time ensures reliable communication of thrusters in converter 1. If the converter 2 is triggered before the converter 1 has been completely turned-off, a large circulating current would flow between the two converters.
- Irregular jumps in the level of the DC terminal voltage at the point of current reversal must be avoided in order to achieve a smooth change over of current from one converter to the other. Thus the firing pulse control should, ideally, be such that the mean DC terminal voltage of the converter 2, at the instant of current reversal, is the same as that of the converter 1.
- From the above discussion, it becomes clear that such a mode of operation requires sophisticated control system which automatically blocks and unblocks the individual converters in accordance with the direction of load current suitably with a safety intervals.

APPLICATIONS OF DUAL CONVERTER

- Dual converters are mostly used at industries where we requires reversible D.C. Generally Dual Converters are used for Speed Control of D.C. Motors etc.


Thank You